Adjustment Manual

for remote controlled Neher motors with 1-channel remote control - 868 MHz 22 44 72
- 915 MHz 22 44 77

Please follow these instructions by all means!

Device function

- blind protection (torque limiting)
- starting up the drive with service cable or remote

As-delivered condition

- preset end positions, 15cm above the ground

Perfect using of the radio signal

- the minimum clearance between the radio drives must be 15cm
- do not bent the antenna
- do not shorten or extend the antenna
- change the position of the antenna if the reception is poor
- if possible antenna should be laid freely

Attention: make sure that there is no contact between antenna and aluminium profiles. The antenna must be laid upwards or downwards but in no case in direction to the fabric

Intended use

- please note that radio equipment are not allowed to be used in areas with a higher disruptive factor (e.g. hospitals, airports,...)
- he remote is only permitted for devices or electric facilities where interferences in the hand-/wall transmitter or receiver does not pose a risk to humans, animals or objects, or where this risk is covered by other safety devices
- the operator is no way protected from interferences from other telecommunications or facilities (e.g. also radio controlled equipment) which are licensed to operate in the same frequency range

Please note before mounting

- motor is only in working order in installed condition
- connection only in voltage free state

General information

- risk of injury due to electrocution!
- the connections to the 230V mains must be made by an authorised specialist. Check the system regularly for wear or damage

1 End position setting and channel setting

Connection only in voltage free status!
Retain cable winding on the motor head for revision purposes!

Should the motor already be installed disconnect it shortly from the grid and continue with point ❸.

❶ Connect drive with installation cable like illustrated.

❷ put the plug of the installation cable into the socket (230V).

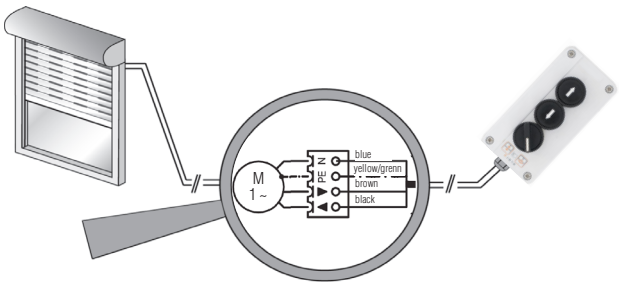

Teach-in of the remote

Setting must be finished within 5 min. after disconnection!

❸ Turn the rotary switch of the installation cable to the **left**.

❹ Open the lid on the back side of the remote. Press the **(S) select**-button on the back side of the remote (see image) that has to be taught-in. Shortly afterwards the motor runs up and down for 2 minutes. During this time the radio transmitter can be taught-in.

❺ Go up with the remote as close as possible to the motor to be taught. In case of several systems the remote only addresses the closest motor. Press the **up**-button **directly** after the start of run up (1 sec.). The motor stops shortly and continues to run up. Press the **down**-button **directly** after the start of a run down (1 sec.). The motor stops. Press the **stop**-button for 6 seconds. The radio transmitter is hereby taught.

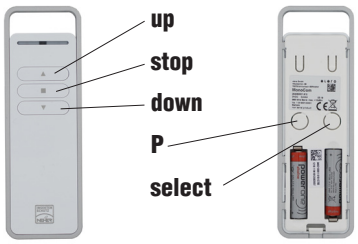

End position setting

Setting must be finished within 5 min. after disconnection!

❻ Move the sliding bar into a central position (distance from the top at least 30cm). Now **simultaneously** press the **up**- and **down**-buttons and keep pressing them until the motor shortly runs up and down after 5 seconds.

❼ Postition the sliding bar approx. 5 cm above the desired **lower** end position. The motor slowly runs down, stops shortly and gets faster then. Afterwards approach to the lower end position (corrections are possible via the buttons). **Make sure that the fabric hangs tautly in the lower end position!** Now press the **up**-button until the motor automatically stops. Hereby the **lower** end position is set.

❽ Press the **up**-button again. Move the sliding bar **up** to the stop (torque cut-out). While doing so the motor slowly starts running, stops shortly and gets faster until the stops at the top. Now press the **down**-button until the motor automatically stops. Hereby the **upper** end position is set.

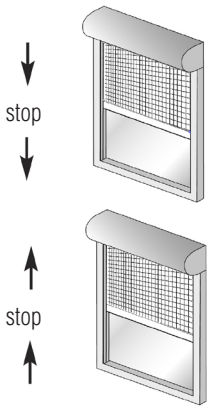

The motorized roller screen has to be moved up and down three times after the end position setting. Thus the motor optimizes his setting.

Comment: to set the end positions again shortly disconnect the motor from the grid and repeat the steps within 5 min. starting from point ❻.

Adjustment Manual

for remote controlled Neher motors with 1-channel remote control - 868 MHz 22 44 72
- 915 MHz 22 44 77

2 Optional: teaching-in of an intermediate position

Programming of an intermediate position

For teaching-in an intermediate position a radio transmitter must be taught in and the motor has to be in the lower end position.

❶ Press and hold th **up**-button up to the desired position.

❷ As soon as you reach this position press additionally the **stop**-button. Then release both buttons. The motor stops. Hereby the intermediate position is set (if you keep pressing the buttons longer than 6 sec. the intermediate position will be deleted immediately).

For changing the intermediate position repeat the steps starting from point ❶. The former intermediate position will be deleted automatically.

Approaching to the intermediate position.

❶ Press the **up**-button twice in quick succession (double click).

❷ The motor approaches to the stored intermediate position. Is there no intermeditate position stored the motor approaches to the upper end position.

3 Optional: teaching-in of further radio transmitter (maximum 16 radio channels can be taught in)

❶ Press simultaneously (for 3 sec.) the **up**-, **down**- and **(P) programming**-buttons of an already taught-in radio transmitter. The status LED lights up briefly. The motor is in willingness to learn for 5 minutes.

❷ Press the **(P) programming**-button on the backside of the radio transmitter to be taught until the motor starts. The motors runs up and down for two minutes. Go up with the remote as close as possible to the motor to be taught. In case of several systems the remote only addresses the closest motor. Press the **up**-button **immediately** after the start of the run-up. The motor stops briefly. Press the **down**-button **immediately** after the start of the run-down. The motor stops. Press the **stop**-button for 6 seconds. Hereby the radio transmitter is taught.

4 Optional: delete radio transmitter

Delete individual radio transmitter

❶ Press simultaneously (for 3 sec.) the **(P) programming**- and the **stop**-button on the radio transmitter to be deleted.

❷ Keep pressing this key combination until the status LED goes out (about 6 sec.). Hereby the radio transmitter is taught.

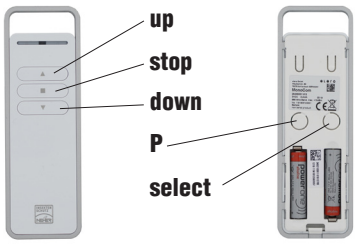

Delete all radio transmitters

❶ Press simultaneously the **(P) programming**-, **up**-, **stop**- and **down**-button of an already taught-in radio transmitter.

❷ Keep pressing this key combination until the status LED goes out (about 6 sec.). Hereby all radio transmitters are deleted.

5 Connection example for the electrician

The motor controls in up-/down direction must be mutually locked.
A changeover delay of min. 0,5 sec. must be ensured.

Several motors can be connected parallely. Pay attention to the maximum switching capacity of the switching point.

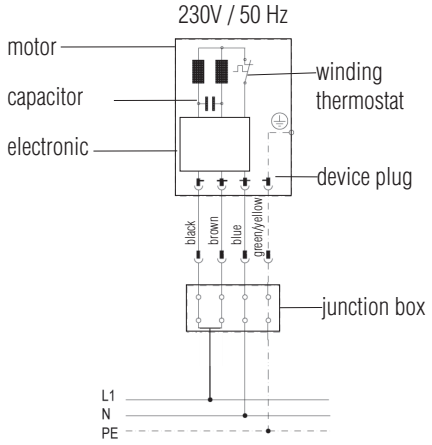

Adjustment Manual

for remote controlled Neher motors with 1-channel remote control - 868 MHz 22 44 72
- 915 MHz 22 44 77

6 Status LED and meaning

- orange flashes slowly	- channel (transmitter) is not taught to receiver
- orange flashes fast	- channel (transmitter) is in learning mode. Operation of already taugh-in receiver not possible
- orange flashes fast (appox. each 2 sec.)	- more than 10 receiver ready for learning
- orange flashes, then green	- transmission signal is sent, all responses received
- orange or green flashes repeated, then red after 6 sec.	- channel (transmitter) is deleted
- orange flashes, then red	- transmission signal is sent, not all responses received
- red flashes fast	- battery almost exhausted

7 Technical data

- voltage supply	3 V, 2 x Micro LR03 battery (AAA)
- radio frequency (MHz)	868 / 915
- transmission power (mW) I (dBm)	≤ 500 I ≤ 10
- number of channels	1 or 6 (bidirectional)
- operating temperature (C°)	0 ... 50
- relative humidity	0…95% non-condensing
- protection type (IP)	20
- dimensions (w x h x d) (mm) - module hand transmitter	150 x 49 x 14
- weight (g) (inclusive batteries)	ca. 90
- mounting type (optional)	wall installation
- compliance	CE

8 Troubleshooting

Fault/Disorder	Possible causes	Debugging
- radio learning mode does not start	- connection error - motor is not connected with the mains - the window has already expired (5 min.) - thermostate has triggered - radio transmitter without or with low battery	- check connection - check mains voltage - interrupt mains voltage briefly - allow motor to cool down - check radio transmitter (status LED must light up at the push of button)
- radio transmitter is not taught-in	- up/down-buttons were pressed too late. Please consider the time window (1 sec.) - radio transmitter is already taught-in	- start the radio learning mode again - press stop-button
- motor runs only in one direction	- faulty connection	- check connection
- motor does not react on double-key pressing on radio transmitter	- time window has already expired after mains return (5 min.) - motor is not connected with the mains - radio transmitter is not taught-in	- interrupt mains voltage briefly - check mains connection - teach-in radio transmitter
- motor does not run, status LED light is off	- battery is empty - battery is inserted incorrectly	- insert new battery - insert battery correctly
- motor does not run, status LED light is on	- receiver outside of the wireless range - radio transmitter is not taught to receiver	- reducte distance to receiver - teach-in radio transmitter
- motor runs to the wrong direction	- directions are incorrectly taught-in	- delete radio transmitter and teach it in correctly
- motor does not react	- thermostat has triggered	- allow motor to cool down
- motor stops after a short run	- end positions are not set	- set end positions
- motor does not teach-in end positions	- random travel - travel to end position/stop too short	- delete end positons and set them again - motor must run up to the short stop